ПРЕДПРИЯТИЕ МАКСАЭРО

- **Производство воздуховодов и систем вентиляции**
- **Клапаны противопожарные**
- **Клапаны дымоудаления**
- **Вентиляторы общепром, дымоудаления, крышные**

220056, г. Минск, ул. Стариновская, 15
Тел./факс: +375 17 244-67-44, 258-67-51, 347-73-56, 252-54-27
Velcom: +375 29 603-88-99
E-mail: **olegaero**@yandex.by
www.maxaero.by

МаксАЭРО

Датчики протока Siemens QVE3000.0 и QVE3100.0

МаксАЭРО

Flow sensor

QVE3000.0xx
QVE3100.0xx

for liquids in DN10…25 pipes

- **Vortex flow sensor made from robust red brass**
- **Output signal: DC 0…10 V or 4…20 mA**
- **Flow range: 1.8…150 l/min**
- **Used for temperature ranges: -15…125 °C**
- **Operating voltage: DC 18…33 V (QVE3100..) or 11.5…33 V (QVE3000..)**
- **Temperature-insensitive measuring principle**
- **No moving parts**
- **Low pressure loss**
- **Insensitive to soiling**

Use

The flow sensor is suited to continuously measure flow or monitor liquids such as hot water, heating water, or standard water-glycol mixes in HVAC plants and applications. The sensors can be used in automation and control systems as control sensor or measured value sensor.

Type summary

Type / ASN	Product number (SSN)	Nominal width dia. [mm]	Measuring range [l/min]	[m^3 / h]	Output signal DC
QVE3000.010	S55720-S211	DN 10	1.8…32	0.1…1.92	DC 0…10 V
QVE3000.015	S55720-S212	DN 15	3.5…50	0.2…3.0	DC 0…10 V
QVE3000.020	S55720-S213	DN 20	5.0…85	0.3…5.1	DC 0…10 V
QVE3000.025	S55720-S214	DN 25	9.0…150	0.5…9.0	DC 0…10 V
QVE3100.010	S55720-S215	DN 10	1.8…32	0.1…1.92	DC 4…20 mA
QVE3100.015	S55720-S216	DN 15	3.5…50	0.2…3.0	DC 4…20 mA
QVE3100.020	S55720-S217	DN 20	5.0…85	0.3…5.1	DC 4…20 mA
QVE3100.025	S55720-S218	DN 25	9.0…150	0.5…9.0	DC 4…20 mA

Ordering

When ordering, please specify the quantity, type, and product name.

Type	*Stock number*	*Designation*
ASN	SSN	Product designation
QVE3000.010	S55720-S211	Flow sensor

Example:

1 flow sensor QVE3000.010

Delivery

Scope of delivery:
- Flow sensor with external thread connection
- Straight, 3-pin plug M12x1 with cable, 2 m
- Mounting instructions

Service life

10 year curve as related to flow and media temperature

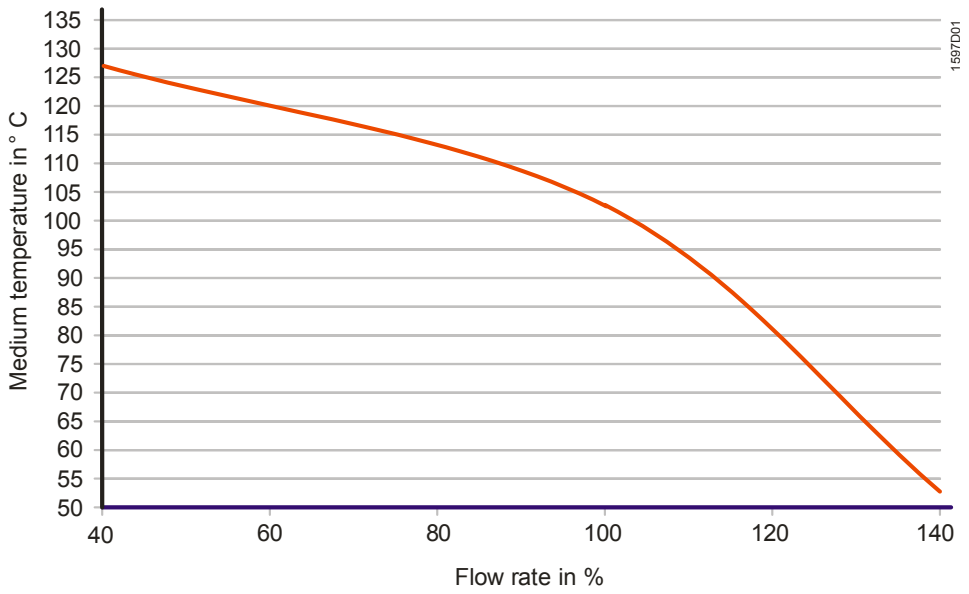

Engineering notes

⚠ Warning

Operational safety of the supplied device is only guaranteed when used properly (flow measurement of liquids). Do not exceed under no circumstances the indicated limit values (see "Technical data").

Mounting notes

Smooth operation of the flow sensor is guaranteed only if the mounting instructions delivered with the product are adhered to completely. See also the following notes.

Avoid air bubbles in the medium

Install the flow sensor where the pipes are completely filled with the medium to be measured, and where gas bubbles and cavitation in the medium are avoided.

Note mounting position and flow direction

Mount the flow sensor only in the intended position or proper flow direction (note the arrow on the connecting pipe). The measured flow values will be wrong if the sensor is mounted in the wrong position or direction.

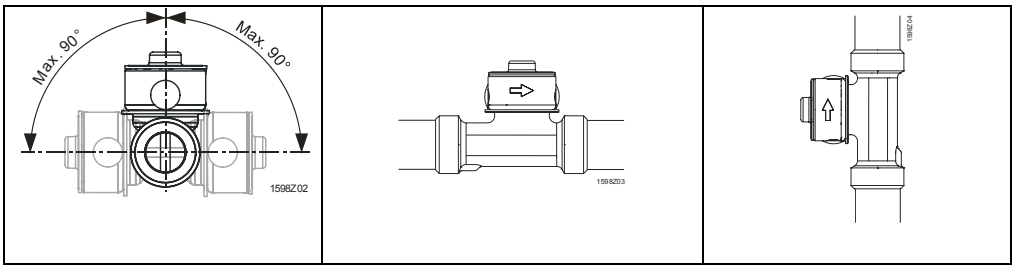

Further important notes

- The entire measuring path must be free of foreign bodies.
- Plan for sufficient settlement distance before the sensor inlet or outlet area to avoid eddying effects e.g. by curvatures, steps, changes to diameter, valves, pumps, etc..
- For this reason, strictly adhere to the recommended minimum distances as recommended in the mounting instructions.
- When mounting red brass-type flow sensors, use flat seals at the inlet and outlet of the red brass pipe.

Installation notes

- Comply with all local regulations on electrical systems.
- Use only qualified personnel for electrical installation.
- Always de-energize the system before connecting the wires of the mains cable.

Operating notes

Do not exceed maximum operating pressure as well as maximum medium temperature (see "Technical data").

Service notes

- Do not remove a flow sensor or its body from a piping system under pressure.
- The flow sensor is maintenance-free and cannot be repaired by the user.

Disposal

The devices are considered electronics devices for disposal in term of European Directive 2012/19/EU and may not be disposed of as domestic waste.

- Dispose of the device via the channels provided for this purpose.
- Comply with all local and currently applicable laws and regulations.

Technical data

Product data	Nominal width and measuring range	See "Type summary"
General function data	Measuring principle	Vortex
	Sensing element	Piezo-ceramic sensor element
	Measuring accuracy at <50% FS (water) at >50% FS (water)	 <1% FS (Full Scale) <2% measured value
	Dynamic response: Response time Switch-on delay	 <500 ms <2 s
	Flow media	Heating water with standard additives Potable water (hot / cold)
	Admissible medium temperature	Non-freezing …100 °C (short-term to 125 °C, <4 bar)
	Max. pressure at medium temperature during life	12 bar at 40 °C 6 bar at 100 °C
Electrical data	Types with voltage output	Supply: DC 11.5…33 V, <6 mA (SELV) Output: DC 0…10 V (loads up <1 mA)
	Types with current output	Supply: DC 18…33 V (SELV) Output: DC 4…20 mA (loads up to 500 Ω)
Connections	Electrical connection	Straight, 3-pin plug M12x1 with 2 m cable
	External supply line protection	Stromversorgung mit Strombegrenzung von max. 10 A
	External thread on measuring pipe	See 'Dimensions'
Degree of protection	Protection class	III according to EN 60730-1
	Protection degree of housing	IP65 according to EN 60529, mounted and screwed
Environmental conditions	Permitted ambient temperature Transport and storage Operation	 –30…85 °C –15…85 °C
Environmental compatibility	The product environmental declaration CE1E1598*) contains data on environmentally compatible product design and assessments (RoHS compliance, materials composition, packaging, environmental benefit, disposal).	

Standards, directives, and approvals	Product standard	EN 61010-1 Safety requirements for electrical equipment for measurement, control and laboratory use.
	Electromagnetic compatibility (Applications)	For use in residential, commerce, light-industrial and industrial environments
	EU Conformity (CE)	CE1T1597xx *)
	EAC Conformity	Eurasia Conformity
Materials	Housing under pressure	Red brass
	Sealing material	EPDM ethylene-propylene-rubber (peroxide linked)
	Sensor	ETFE
Dimensions (weight)	Including packaging	See Dimensions

Device connection

QVE3000.0xx	QVE3100.0xx
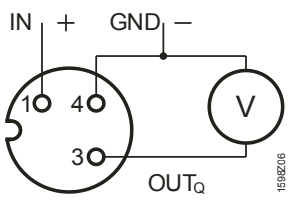	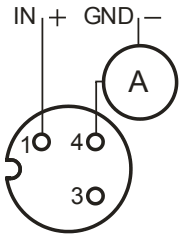

Pin assignment

Plug pin	Wire color
1	brown
3	blue
4	black

Dimensions

Dimensions in mm

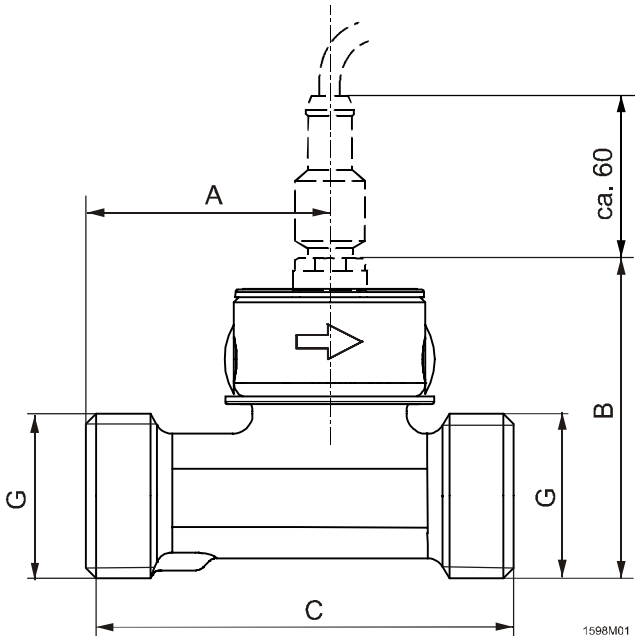

Type (ASN)	Nominal width dia.	A [mm]	B [mm]	C [mm]	G [inch]	Weight [g]
QVE3x00.010	DN 10	32	57	65	G¾	230
QVE3x00.015	DN 15	40	59	75	G¾	240
QVE3x00.020	DN 20	49	65	86	G1	340
QVE3x00.025	DN 25	70	71	109	G1¼	510