ПРЕДПРИЯТИЕ МАКСАЭРО
• Производство воздуховодов и систем вентиляции
• Клапаны противопожарные
• Клапаны дымоудаления
• Вентиляторы общепром, дымоудаления, крышные

220056, г. Минск, ул. Стариновская, 15
Тел./факс:+375 17 244-67-44, 258-67-51, 347-73-56, 252-54-27
Velcom: +375 29 603-88-99
E-mail: olegaero@yandex.by
www.maxaero.by

МаксАЭРО

Электромагнитные клапаны XCPC серии 2L дополнительные характеристики

МаксАЭРО

XCPC®

2 Position 2 Way Solenoid Valves

This kind of valve widely used in wide different industry, you can find the valve with different material like brass, stainless steel, engineering plastic, and they are used for pressure range from 0 to 50 bar, temperature from -10 °C to 180°C. If there is no current models with your meet, please contact us, we are available to provide specialized valves according to your requirement.

General Information About Solenoid Valve

Inner structure and categories of two way solenoid valves

Direct acting solenoid valves

Including normal close style (N.C.) and normal open style(N.O.). The N.C. style solenoid valve stay close at power off condition. When poweron, the coil yields electricity-magnetic force, which exceed the spring force and hence pulls active armature approaching to static armature, the valve becomes open; when power off, the electricity-magnetic force disappear and the active armature go back to its original place by the spring force, the valve close. The N.O. style is just opposite. These valve are normally simple structure, dependable action, fast response, high, frequency and with ≤6mm small orifice size(N.O. style ≤4mm).

Diaphragm pilot solenoid valves

This style valve makes main valve and pilot valve together, when power on, the coil yields electricity-magnetic force pulls active armature approaching to static armature, the pilot valve open and control the main valve to open; when power off, the electricity-magnetic force disappear and with the gravity and spring force, the active armature close the pilot valve, which control the main valve to close. The N.O. style is just opposite.These valve are normally with bigger orifice size and ≤10Bar working pressure and with zero differential working pressure.

Piston pilot solenoid valves

Similar with piston pilot solenoid valves, but supports for higher pressure and temperature,with ≥1 Bar differential working pressure.

Seal Features

Material / Applicability / Medium	NBR	HNBR	EPDM	VMQ	FKM	PTFE	PU
Highest working temperature	80℃	120℃	120℃	180℃	120℃	200℃	80℃
Lowest working temperature	-5℃	-10℃	-20℃	-40℃	-20℃	-50℃	-20℃
Anti-burning	×	×	×	△	◎	◎	△
Steam	×	△	◎	○	△	○	×
Oil	◎	◎	×	△	◎	◎	◎
O_3	△	◎	◎	◎	◎	◎	◎
Chemical	△	○	◎	◎	◎	◎	◎
Acid	△	○	◎	△	◎	◎	×
Alkality	○	◎	◎	△	◎	◎	×
Water	○	○	◎	○	○	◎	◎
Wearing	○	◎	○	×	○	◎	◎
Anti distortion	○	○	○	◎	○	×	×
Tension	◎	◎	◎	×	○	×	◎

Description of the symbol: ◎ Very good ○ Good △ Normal level × Not OK

General Information About Solenoid Valve

Part List

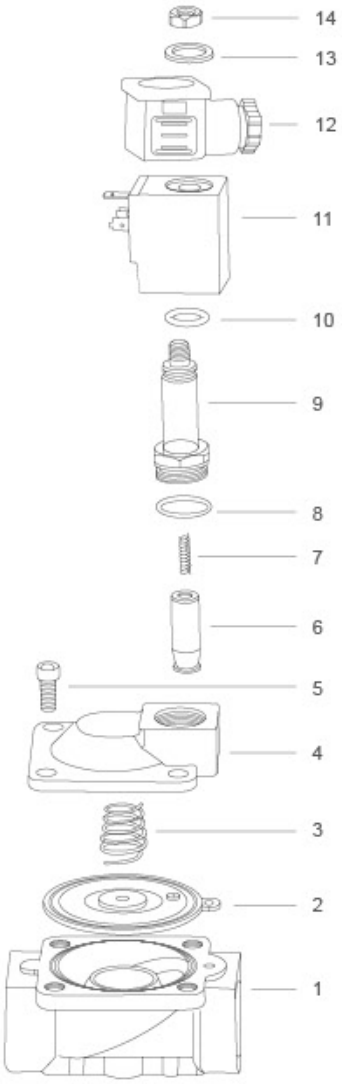

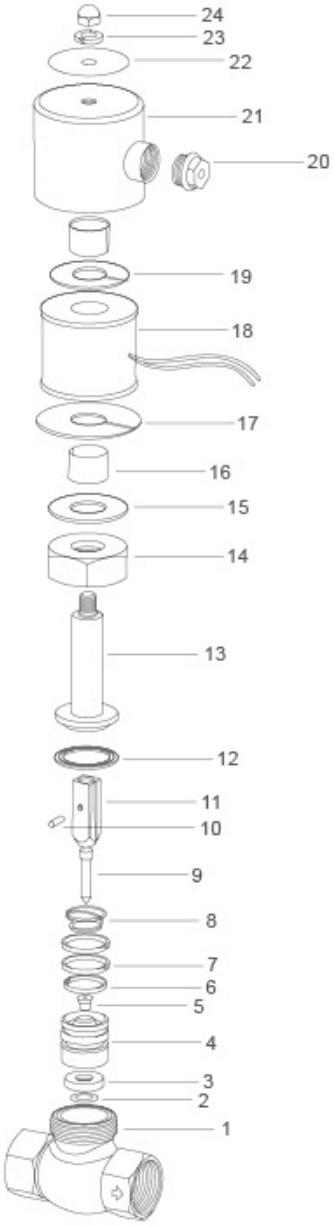

No	Designation
1	Valve body
2	O-ring
3	Seal pad
4	Pilot
5	Spring
6	Armature
7	Coil
8	Steel washer
9	Washer
10	Spring washer
11	Nut

No	Designation
1	Valve body
2	Diaphragm
3	Diaphragm spring
4	Valve cover
5	Hexagon screw
6	Pilot units
7	Plunger Spring
8	O-ring
9	Plunger tube assembly
10	O-ring
11	Coil
12	Connector
13	Gasket
14	Lock Nut

No	Designation	No	Designation
1	Valve body	13	Static armature
2	Washer	14	Nut
3	Seal pad	15	Gasket
4	Valve core	16	Bushing
5	Seal	17	Steel plate
6	Gasket	18	Coil
7	Guide ring	19	Steel plate
8	Spring	20	Nut
9	Valve needle	21	Steel cover
10	Pin	22	Min plate
11	Armature	23	Spring washer
12	Seal ring	24	Nut

2L(US) Series 2/2 Solenoid Valve

Ordering Code

2L — **170** — **15** — **AC220V**

Specification Code
2L:Steam Type Two-position Two-way Solenoid Valve

Aperture of Flow Rate
170:17mm
200:22mm
300:30mm
500:50mm

Port Size
10:G3/8"
15:G1/2"
20:G3/4"
25:G1"
35:G1¹/4"
40:G1¹/2"
50:G2"

Standard Voltage
DC12V DC24V
AC24V 50Hz/60Hz
AC36V 50Hz/60Hz
AC110V 50Hz/60Hz
AC220V 50Hz/60Hz
AC380V 50Hz/60Hz

Graphic Symbol

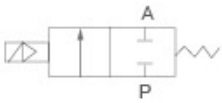

Specifcation

Model	2L170-10	2L170-15	2L170-20	2L200-25	2L300-35	2L300-40	2L500-50
Working Medium	Air, Water, Steam						
Motion Pattern	Guide Type						
Type	Normal Close Type						
Aperture of Flow Rate(mm)		17		22	30		50
CV Value		4.8		12	20		48
Port Size	G3/8"	G1/2"	G3/4"	G1"	G1¹/4"	G1¹/2"	G2"
Operation Fluid Viscosity	20 CST(Below)						
Working-pressure	Air, Water, Steam:0.1~1.5MPa						
Max. Pressure Resistance	2.25MPa						
Operating Temperature Range	-5~+180℃						
Voltage Range	±10%						
Material of Body	Brass						
Material of Oil Seal	PTFE						

Internal structure

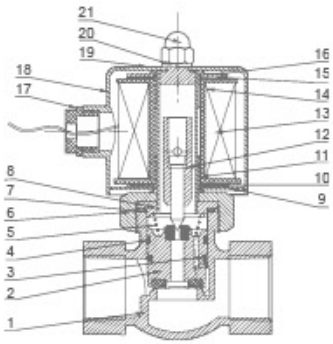

No	Name	No	Name	No	Name
1	Body Of Valve	8	Assembly of Iron Core	15	Gasket
2	Assembly Of Piston	9	Magnetic Plate	16	Magnetic Plate
3	Springiness Spacer	10	Gasket	17	Cord-locks
4	Wear Strip	11	Bush	18	Iron Cover
5	Spring	12	Assembly Of Iron Core	19	Name Plate
6	Nut	13	Assembly Of Coil	21	Gasket
7	O-ring	14	Bush	21	Head Cover Nut

Overall Dimensions

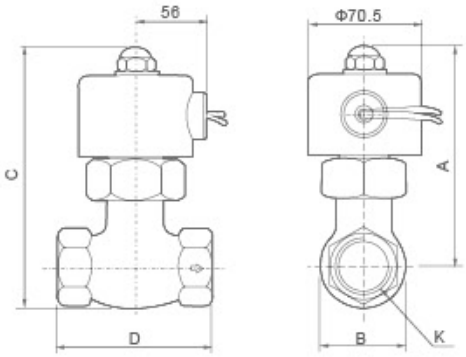

Dimension Sheet

Model	A	B	C	D	K
2L170-10	125	38	146	76	G3/8"
2L170-15	125	42	146	81	G1/2"
2L170-20	125	47	146	84	G3/4"
2L200-25	136	54	162	91.5	G1"
2L300-35	148	76	185	111	G1¹/4"
2L300-40	148	76	185	111	G1¹/2"
2L500-50	176	88	223	164	G2"