ПРЕДПРИЯТИЕ МАКСАЭРО
• Производство воздуховодов и систем вентиляции
• Клапаны противопожарные
• Клапаны дымоудаления
• Вентиляторы общепром, дымоудаления, крышные

220056, г. Минск, ул. Стариновская, 15
Тел./факс:+375 17 244-67-44, 258-67-51, 347-73-56, 252-54-27
Velcom: +375 29 603-88-99
E-mail: olegaero@yandex.by
www.maxaero.by

МаксАЭРО

Электромагнитные клапаны XCPC серии PU220 дополнительные характеристики

МаксАЭРО

XCPC®

2 Position 2 Way Solenoid Valves

This kind of valve widely used in wide different industry, you can find the valve with different material like brass, stainless steel, engineering plastic, and they are used for pressure range from 0 to 50 bar, temperature from -10 °C to 180°C. If there is no current models with your meet, please contact us, we are available to provide specialized valves according to your requirement.

General Information About Solenoid Valve

Inner structure and categories of two way solenoid valves

Direct acting solenoid valves

Including normal close style (N.C.) and normal open style(N.O.). The N.C. style solenoid valve stay close at power off condition. When poweron, the coil yields electricity-magnetic force, which exceed the spring force and hence pulls active armature approaching to static armature, the valve becomes open; when power off, the electricity-magnetic force disappear and the active armature go back to its original place by the spring force, the valve close. The N.O. style is just opposite. These valve are normally simple structure, dependable action, fast response, high, frequency and with ≤6mm small orifice size(N.O. style ≤4mm).

Diaphragm pilot solenoid valves

This style valve makes main valve and pilot valve together, when power on, the coil yields electricity-magnetic force pulls active armature approaching to static armature, the pilot valve open and control the main valve to open; when power off, the electricity-magnetic force disappear and with the gravity and spring force, the active armature close the pilot valve, which control the main valve to close. The N.O. style is just opposite.These valve are normally with bigger orifice size and ≤10Bar working pressure and with zero differential working pressure.

Piston pilot solenoid valves

Similar with piston pilot solenoid valves, but supports for higher pressure and temperature,with ≥1 Bar differential working pressure.

Seal Features

Material / Applicability / Medium	NBR	HNBR	EPDM	VMQ	FKM	PTFE	PU
Highest working temperature	80℃	120℃	120℃	180℃	120℃	200℃	80℃
Lowest working temperature	-5℃	-10℃	-20℃	-40℃	-20℃	-50℃	-20℃
Anti-burning	×	×	×	△	◎	◎	△
Steam	×	△	◎	○	△	○	×
Oil	◎	◎	×	△	◎	◎	◎
O_3	△	◎	◎	◎	◎	◎	◎
Chemical	△	○	◎	◎	◎	◎	◎
Acid	△	○	◎	△	◎	◎	×
Alkality	○	◎	◎	△	◎	◎	×
Water	○	○	◎	○	○	◎	◎
Wearing	○	◎	○	×	○	◎	◎
Anti distortion	○	○	○	◎	○	×	×
Tension	◎	◎	◎	×	○	×	◎

Description of the symbol: ◎ Very good ○ Good △ Normal level × Not OK

General Information About Solenoid Valve

Part List

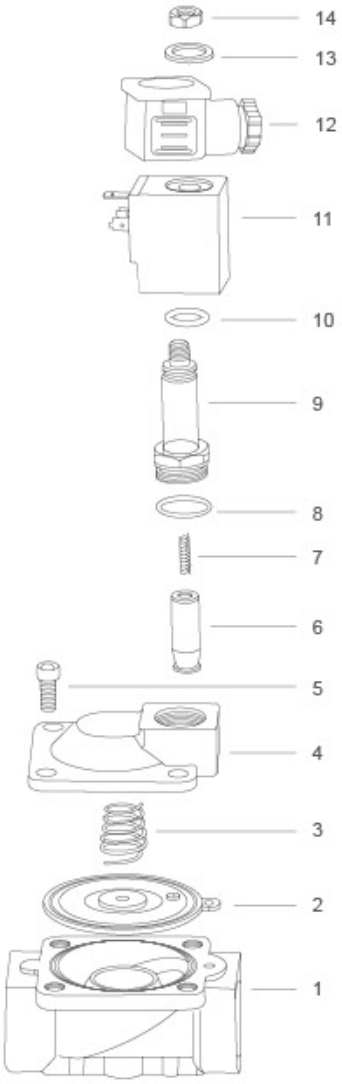

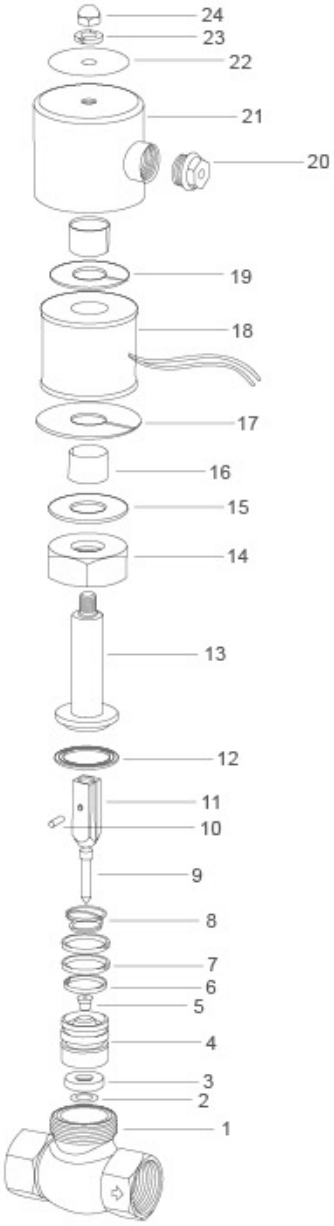

No	Designation
1	Valve body
2	O-ring
3	Seal pad
4	Pilot
5	Spring
6	Armature
7	Coil
8	Steel washer
9	Washer
10	Spring washer
11	Nut

No	Designation
1	Valve body
2	Diaphragm
3	Diaphragm spring
4	Valve cover
5	Hexagon screw
6	Pilot units
7	Plunger Spring
8	O-ring
9	Plunger tube assembly
10	O-ring
11	Coil
12	Connector
13	Gasket
14	Lock Nut

No	Designation	No	Designation
1	Valve body	13	Static armature
2	Washer	14	Nut
3	Seal pad	15	Gasket
4	Valve core	16	Bushing
5	Seal	17	Steel plate
6	Gasket	18	Coil
7	Guide ring	19	Steel plate
8	Spring	20	Nut
9	Valve needle	21	Steel cover
10	Pin	22	Min plate
11	Armature	23	Spring washer
12	Seal ring	24	Nut

PU220 Series 2/2 Solenoid Valve(Direct Drive Type)

Graphic Symbol

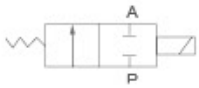

Ordering Code

PU	220	—	02	—	A	AC220V	—	T
Specification Code	**Motion Pattern**		**Port Size**		**Initial Estate**	**Standard Voltage**		**Wiring Form**
PU:Two -position Two -way solenoid valve	220:Direct Drive Type		01:G1/8" 02:G1/4" 03:G3/8" 04:G1/2" 06:G3/4" 08:G1" 12:G1 1/4" 14:G1 1/2" 20:G2"		A: Large Flux AR: Small Aperture Direct Drive F: Flange Type	AC220V AC110V DC12V DC24V		Blank:Standard Coil T:Timer Coil

Specifcation

Model	PU220-01AR	PU220-02AR	PU220-03AR	PU220-03A	PU220-04AR	PU220-04A	PU220-06A	PU220-08A
Working Medium	Air, Water, Oil							
Motion Pattern	220:Direct Drive Type/225:Guide Type							
Type	Normal Close Type							
Aperture of Flow Rate(mm)	1.5	2.3	8	13	8	13	20	25
CV Value	0.10	0.18	1.00	4.00	1.00	4.00	8.60	11.00
Joint Pipe Bore	G1/8"	G1/4"	G3/8"	G3/8"	G1/2"	G1/2"	G3/4"	G1"
Operation Fluid Viscosity	50 CST							
Working-pressure	0~0.7MPa							
Max. Pressure Resistance	1.05MPa							
Operating Temperature Range	-5~+80℃							

Internal structure

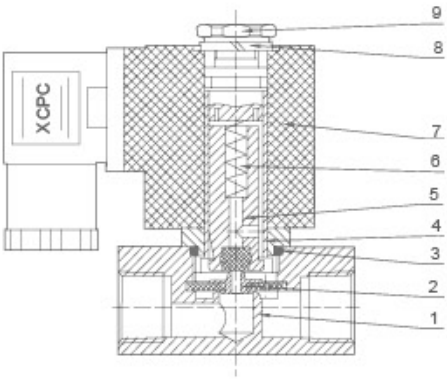

NO	Name
1	Body Of Valve
2	Assembly of Diaphragm
3	O-ring
4	Assembly Of Iron Core
5	Assembly Of Iron Core
6	Spring
7	Coil
8	Gasket
9	Nut

E

PU220 Series 2/2 Solenoid Valve(Direct Drive Type)

Internal structure

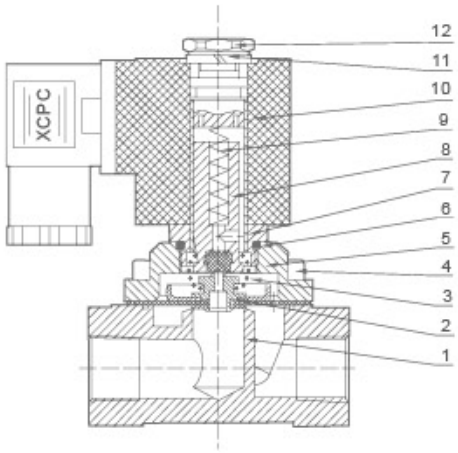

No	Name	No	Name
1	Body Of Valve	7	Assembly Of Iron Core
2	Assembly Of Diaphragm	8	Assembly Of Iron Core
3	Pull Spring	9	Spring
4	Socket Hexagon Screws	10	Coil
5	Valve Cover	11	Gasket
6	O-ring	12	Nut

Overall Dimensions

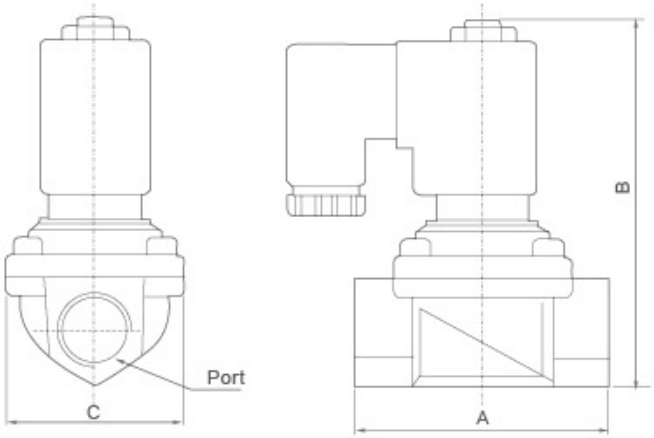

Dimension Sheet

Model	Port	A	B	C
PU220-01AR	G1/8"	22	72	22
PU220-02AR	G1/4"	35	72	25.4
PU220-03AR	G3/8"	55	79.5	30
PU220-03A	G3/8"	65.5	101	48
PU220-04A	G1/2"	65.5	101	48
PU220-06A	G3/4"	71	107	58
PU220-08A	G1"	97	120	70